All specifications are subject to change without notice.
Copyright © INPAQ Technology Co., Ltd. All rights reserved.

WIP252012D-1R5ML

General ROHS HF

Appearance & Shape

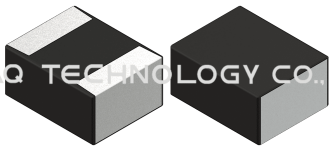

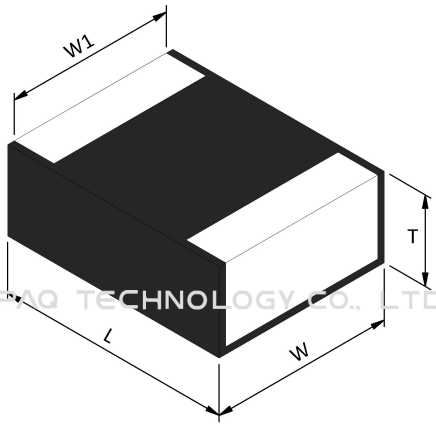

Series	L [mm]	W [mm]	W1 [mm]	T [mm]
252012	2.5±0.2	2.0±0.2	1.8±0.2	1.2 max.
322512	3.2±0.2	2.5±0.2	2.3±0.2	1.2 max.

INPAQ TECHNOLOGY CO., LTD.
INPAQ TECHNOLOGY CO., LTD.
© INPAQ TECHNOLOGY CO., LTD ALL RIGHT

注意 NOTICE: All Specifications are subject to change without notice.
1. 本文件由 INPAQ 佳邦科技網站下載，若規格變更及停產，請於訂購時確認，恕不另行通知。
2. 本文件僅說明參考標準規格，如需訂購，請依實際核准所需規格進行申辦。

All specifications are subject to change without notice.
Copyright © INPAQ Technology Co., Ltd. All rights reserved.

Specification

L size(mm)	2.5±0.2
W size(mm)	2.0±0.2
T size(mm)	1.2 max.
Size code_Inch (mm)	1008/2520
Inductance(uH)	1.5
DCR(mΩ)Typ.	54
DCR(mΩ)Max.	63
Isat(A)Typ.	4
Isat(A)Max.	3.5
Irms(A)Typ.	2.9
Irms(A)Max.	2.5
QValue(Typ.)	30
SRF[MHz] Typ.	60
Withstand voltage(DC)	20V DC
Operating Temperature range(includingself-temperaturerising)℃	-40℃ to +125℃

注意 NOTICE: All Specifications are subject to change without notice.
1. 本文件由 INPAQ 佳邦科技網站下載，若規格變更及停產，請於訂購時確認，恕不另行通知。
2. 本文件僅說明參考標準規格，如需訂購，請依實際核准所需規格進行申辦。

All specifications are subject to change without notice.
Copyright © INPAQ Technology Co., Ltd. All rights reserved.

Notices

Notes

1. Customized design is available, please contact us.

2. All test referenced to 25°C ambient.

3. Inductance tolerance +/- 20%.

4. Inductance is measured with Agilent® LCR meter 4285A (or equivalent) at 1MHz/1V.

5. DC resistance is measured with HIOKI® micro-ohm meter RM3542 or equivalent.

6. Isat：DC current (A) that will cause Li to drop approximately 30%.

7. Irms：DC current (A) that will cause an approximate ΔT of 40°C.

8. ACR definition: ACR=Rs@1MHz-DCR.

9. The rated current value is following either Isat (max.) or Irms (max), which value is lower one.

10. The part temperature (ambient + temp rise) should not exceed 125°C under worst case operating conditions. PCB land pattern, trace size - thick, circuit design and proximity to other components are all the factors will affect the temperature performance of the device. Therefore, it should be approved in application conditions and end product.

11. Rated voltage:20V DC (max.)

Packing

Packing Reel(Inch)	Standard package quantity(KPCS)	Piece weight(gram)	MSL Level
7	3	0.0362	1

注意 NOTICE: All Specifications are subject to change without notice.
1. 本文件由 INPAQ 佳邦科技網站下載，若規格變更及停產，請於訂購時確認，恕不另行通知。
2. 本文件僅說明參考標準規格，如需訂購，請依實際核准所需規格進行申辦。

All specifications are subject to change without notice.
Copyright © INPAQ Technology Co., Ltd. All rights reserved.

Characteristic curve

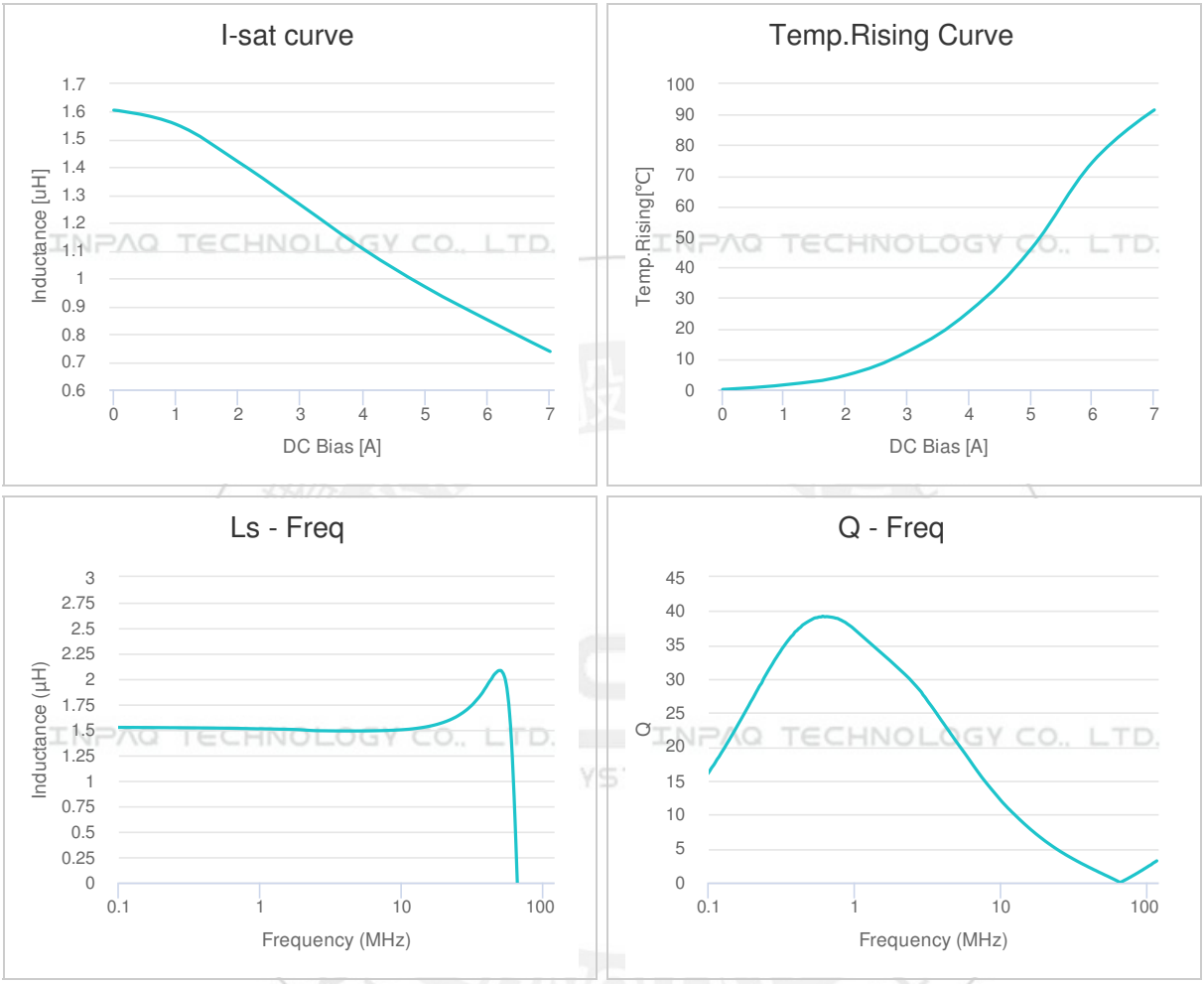

注意 NOTICE: All Specifications are subject to change without notice.
1. 本文件由 INPAQ 佳邦科技網站下載，若規格變更及停產，請於訂購時確認，恕不另行通知。
2. 本文件僅說明參考標準規格，如需訂購，請依實際核准所需規格進行申辦。

All specifications are subject to change without notice.
Copyright © INPAQ Technology Co., Ltd. All rights reserved.

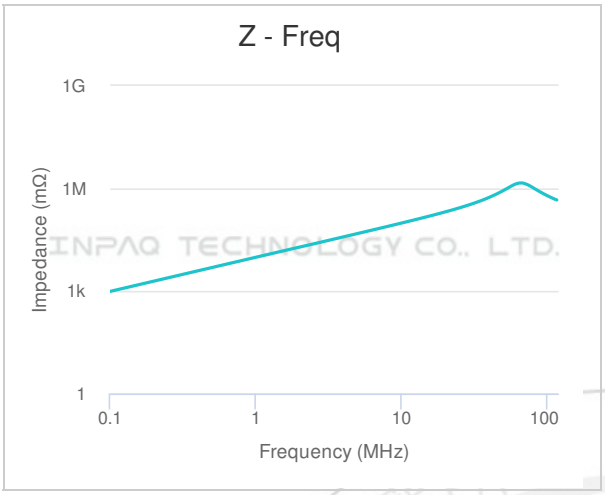

著作權所有 侵害必究
佳邦科技股份有限公司
PSA
PASSIVE SYSTEM ALLIANCE
COPYRIGHT© INPAQ TECHNOLOGY CO., LTD ALL RIGHT RESERVED.

注意 NOTICE: All Specifications are subject to change without notice.
1. 本文件由 INPAQ 佳邦科技網站下載，若規格變更及停產，請於訂購時確認，恕不另行通知。
2. 本文件僅說明參考標準規格，如需訂購，請依實際核准所需規格進行申辦。